Pharmaceutical plant
Electronic plant
Hospital Facilities
Food plant

Square Panel System Co., Ltd.

Your clean room **partner**

SQUARE® PANEL

Clean Room Panel

ISO 9001 BUREAU VERITAS Certification

UKAS QUALITY MANAGEMENT

ISO 9001 : 2008 Certified

Clean Room Technology

Square Panel System Co., Ltd. specializes in manufacturing and designing of modular clean room panels for electronic, pharmaceutical, food and biotechnological industry. Our modular clean room panels are designed to meet the needs of state-of-the-art technology. Prefabricated modular system offers the quality, flexibility and performance required for any fast-track clean room project.

Square Panel System

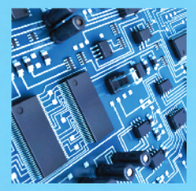

Our modular panels can accommodate whatever plant layout. All parts are prefabricated. During installation, wall and ceiling panels are assembled, windows and doors are placed in specific position simultaneously and the required cutouts or openings can be done at site for lighting, filters, HVAC system and etc.

As your clean room requirements evolve with today's technology, our modular panels can also be modified to facilitate equipment or manufacturing process changes in future.

Our company is consisted of experts with disciplines in all area of modular clean room panel designing, engineering and installation. Our team can support customers step by step throughout the project starting from early stage to the end. This proven manner is a key to achieve success and customer satisfaction.

Being our permanent policy, quality can not be compromised. Our company have been certified according to ISO 9001 : 2008 standard procedure. Our R&D department is working endlessly and putting all efforts to develop new technology and know-how in order to serve the most challenging and fast changing clean room industry.

Different
Clean Room Systems
for different applications and purposes

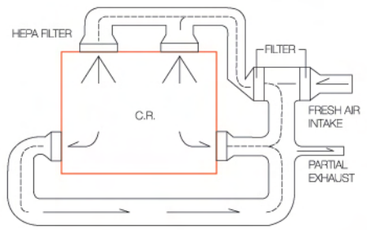

CONVENTIONAL SYSTEM

Conventional System

Air is blown down from ceiling through filter to dilute air in the room. Return air is sucked out at bottom corner. Cleanliness level achievable is from class 10,000 up to class 100,000. Nearly class 1,000 can be achieved if HEPA filters are placed at inlets and the air is ventilated at frequency of 30 times/hour. High level of cleanliness stays near the inlets and becomes lower near outlets

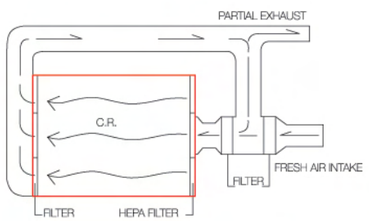

HORIZONTAL LAMINAR SYSTEM

Horizontal Laminar System

With HEPA filter installed on one side wall, air is blown through and sucked out at opposite side before polluted particles settle down. Laminar flow pattern is created horizontally. Cleanliness level is class 100 to class 10,000. Although seldom used in clean room, this system is frequently used for clean bench.

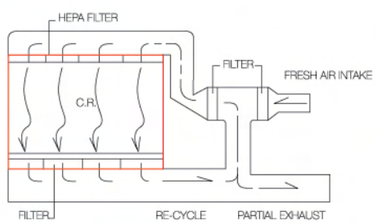

VERTICAL LAMINAR SYSTEM

Vertical Laminar System

This system is for class 100 or less. Air is blown down vertically through HEPA filter at inlets with laminar flow pattern. Air is sucked out at room floor. Ventilation frequency must reach 432 times/hour at speed of 0.3 m/sec and ceiling height of 2.5 meters, producing the highest level of cleanliness.

Standard
of cleanliness
Industrial Clean Room

U.S. Federal Standard 209E

Class Name		Class limits									
		0.1 micron Particles per		0.2 micron Particles per		0.3 micron Particles per		0.5 micron Particles per		5 micron Particles per	
	English	(m3)	(ft3)	(m3)	(ft3)	(m3)	(ft3)	(m3)	(ft3)	(m3)	(ft3)
M1		350	9.9	75	2.14	30.9	0.875	10	0.283	-	-
M1.5	1	1 240	35	265	7.5	106	3	35.3	1	-	-
M2		3 500	99.1	757	21.4	309	8.75	100	2.83	-	-
M2.5	10	12 400	350	2 650	75	1 060	30	353	10	-	-
M3		35 000	991	7 570	214	3 090	87.5	1 000	28.3	-	-
M3.5	100	-	-	26 500	750	10 600	300	3 530	100	-	-
M4		-	-	75 700	2 140	30 900	875	10 000	283	-	-
M4.5	1,000	-	-	-	-	-	-	35 300	1 000	247	7
M5		-	-	-	-	-	-	100 000	2 830	618	17.5
M5.5	10,000	-	-	-	-	-	-	353 000	10 000	2 470	70
M6		-	-	-	-	-	-	1 000 000	28 300	6 180	175
M6.5	100,000	-	-	-	-	-	-	3 530 000	100 000	24 700	700
M7		-	-	-	-	-	-	10 000 000	283 000	61 800	1 750

Concentration limits for intermediate classes can be calculated, approximately, from the equations :
Particles/m³ = $10^M (0.5/d)^{2.2}$ where M is the numerical designation of the class based on SI units and d is the particle size in micrometers, or
Particles/ft³ = $Ne (0.5/d)^{2.2}$ where Ne is the numerical designation of the class based on English units and d is the particle size in micrometers

ISO Standard 14644-1

ISO Classification number (N)	Maximum concentration limit (particles/m³ of air) for particles equal to and larger than the considered sizes shown below (concentration limits are calculated in accordance with equation (1)					
	0.1 micron	0.2 micron	0.3 micron	0.5 micron	1 micron	2 micron
ISO Class 1	10	2				
ISO Class 2	100	24	10	4		
ISO Class 3	1 000	237	102	35	8	
ISO Class 4	10 000	2 370	1 020	352	83	
ISO Class 5	100 000	23 700	10 200	3 520	832	29
ISO Class 6	1 000 000	237 000	102 000	35 200	8 320	293
ISO Class 7				352 000	83 200	2 930
ISO Class 8				3 520 000	832 000	29 300
ISO Class 9				35 200 000	8 320 000	293 000

NOTE Uncertainties related to the measurement process require that concentration data with no more three significant figures be used in determining the classification level.

$Cn = 10^N \times (0.1/D)^{2.08}$ -(1) Cn:maximum permitted concentration D:considered particle size

Comparison of Different Classification Standard

WHO GMP	FED STANDARD (209E)	FED STANDARD (CUSTOMARY)	ISO GMP	EEC GMP
Grade A	M 3.5	Class 100	ISO 5	Grade A
Grade B	M 3.5	Class 100	ISO 5	Grade B
Grade C	M 5.5	Class 10 000	ISO 7	Grade C
Grade D	M 6.5	Class 100 000	ISO 8	Grade D

EEC : European Commission
ISO : International Organization for Standardization Technical Committee
WHO : World Health Organization
GMP : Good Manufacturing Practices for sterile pharmaceutical products; Technical Report No.902, 2002 Annex 6

Panel
Technical Data

- **Product Name :** Modular Clean Room Panel
- **Application :** Wall & Ceiling Panel
- **Available Thickness :** 42, 50, 75, 100 mm.
- **Thermal Conductivity :** 0.0176 Kcal/m.hr. °c

Surface Material

Interior : PPGI (0.5 mm.) with 70 micron PE protective film

Exterior : PPGI (0.5 mm.) with 70 micron PE protective film

Paint Coating

Color : Standard off white (RAL 9002)

Paint Type : Regular Modified Polyester/ Epoxy Primer

Paint Coating : Top/Back 20/5 micron

Back Coating : Foam Grey

Core Material

Material : Polyurethane Foam (PUF)

Standard : DIN4102-1 B3

Type : Self-Extinguishable grade with fire retardants

Closed Cell Content : >92%

Compressive Strength : >1.3 Kg/cm^2

Dimensional Stability (Volume Change) : <1.0%

Blowing Agent : HCFC141b

Density : 40±2 Kgs/m^3

Tongue & Groove System Panel Joint

Profiled slip joint

Available Std. Size

Width: 855,1160 mm.

Length : Max.8000 mm.

Compliance Standard

ISO 9001-2008

GMP Guideline

Square Panel System

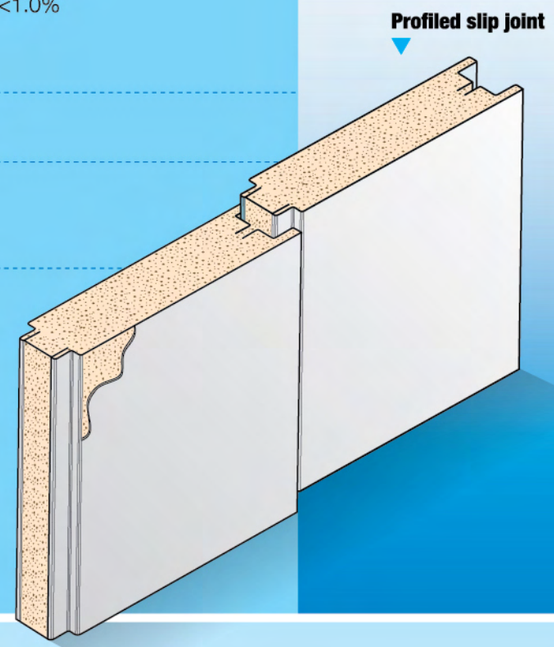

Internal
Architecture
In line with clean room requirements

Wall System

- Fast & easy installation
- Prefabricated panel with concealed electrical wiring
- Self-supporting, dismountable system
- Flush surface and corner coving finishing
- Accommodate changes in clean room layout and future expansion
- Built-in panel return air riser. Return air duct concealed in panel in order to minimize dust deposit and increase utilizing room area for production activity.
- Single piece wall corner

Ceiling System

- Walkable, serviceable ceiling
- Concealed suspension
- Interior flush surface
- Flexible to make cutout at site for lighting, HEPA filter etc.

Clean Room
Door

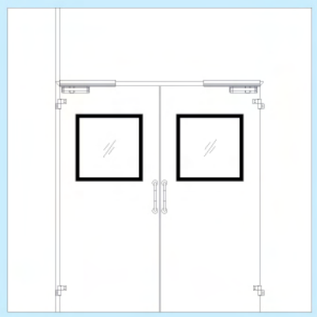

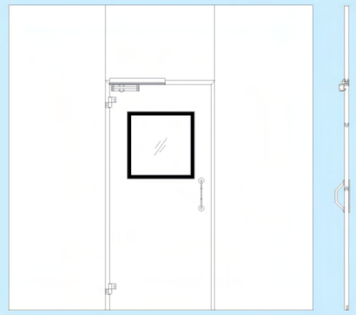

Square Panel System

Door Type & Size
- Available both hinged door and sliding door
- Made to order door size.

Standard Size
- Single door: 900(W) x 2,100(H)
- Double door: 1,800(W) x 2,100(H)

Door Features
- Flush type, hinged door
- Electrical interlock system available
- Flush mounted, built-in viewing window
- Automatic drop seal
- SS door handle
- Sliding door available

Clean Room
Window

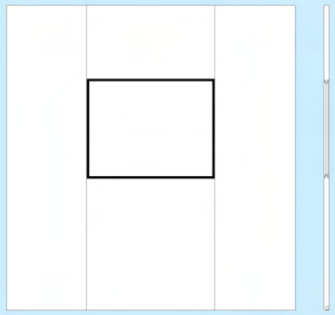

Two types of fixed window are available

- Single glazed window
- Flush mounted & double glazed window
  With nitrogen fill or silica gel pocket to prevent condensation Standard size 1,160(W) x 900(H) mm.

Square Panel System

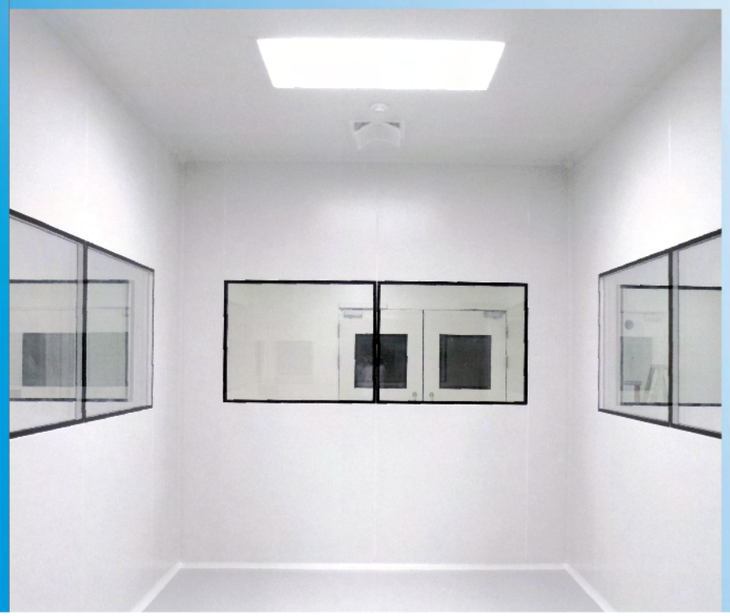

High-level technology is utilized in design and **manufacture of every panel details.**

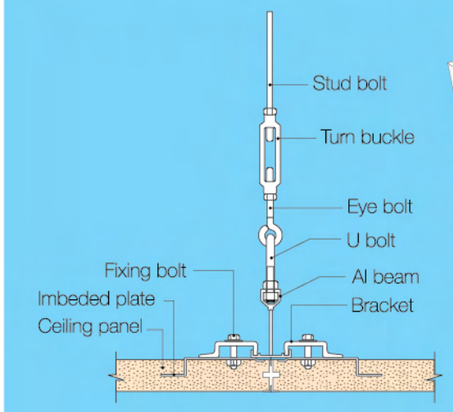

CEILING SUSPENSION
(CONCEALED BEAM)

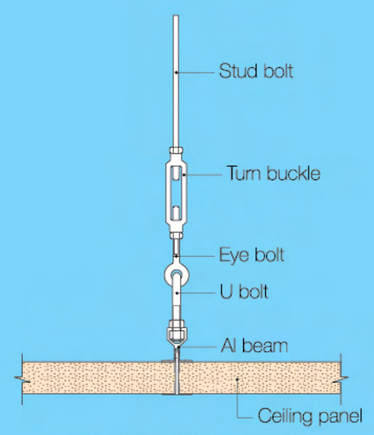

CEILING SUSPENSION
(SIT ON BEAM)

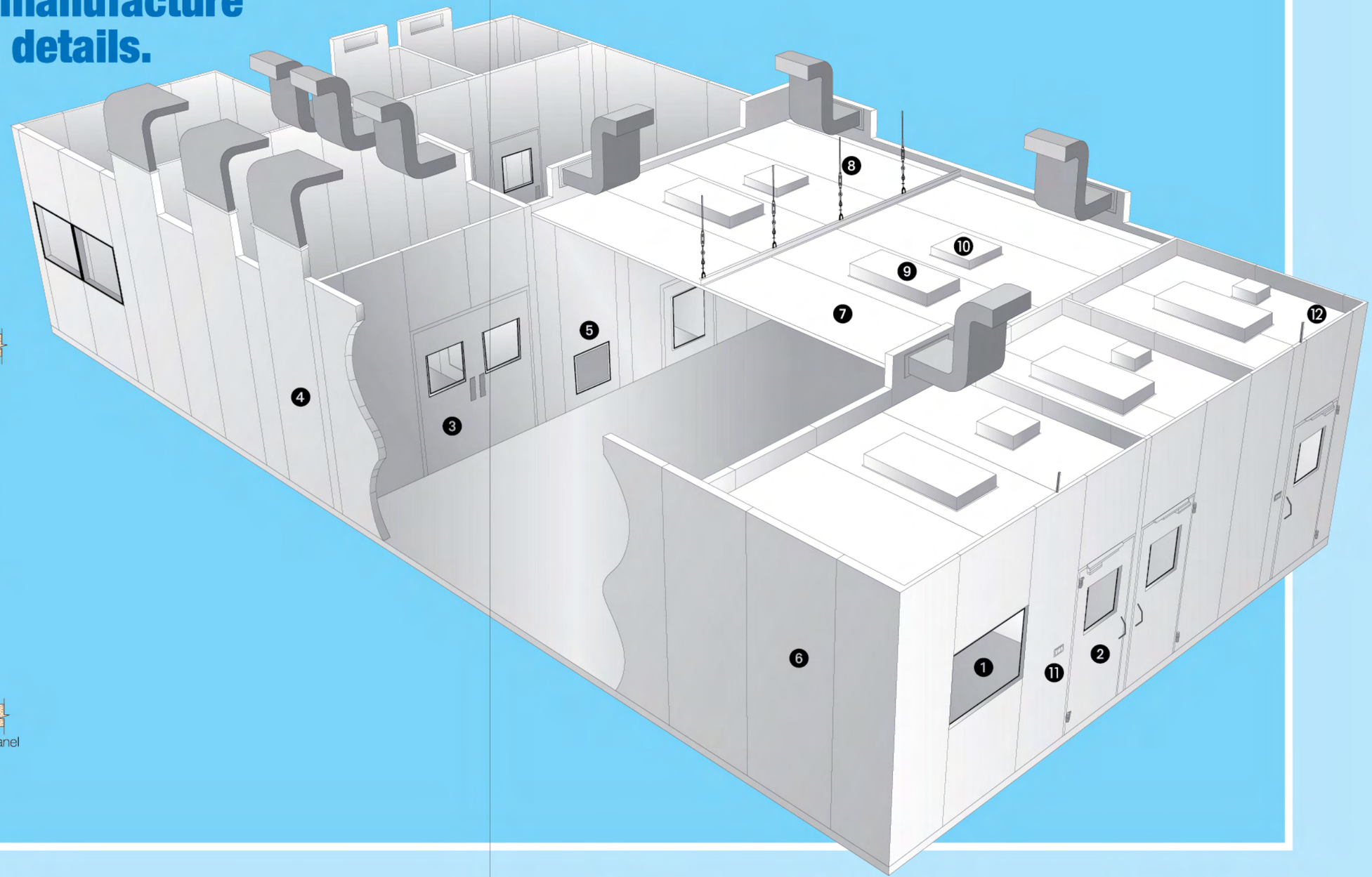

1. Window
2. Single swing door
3. Double swing door
4. Retrun air riser (Inbuilt)
5. Grille
6. Wall panel
7. Ceiling panel
8. Hanger
9. Room light
10. Supply air inlet
11. Light switch
12. Concealed electrical conduit
13. Cart-in Pass box

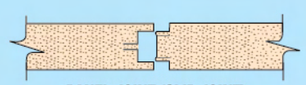

PANEL JOINT (SLIP JOINT)

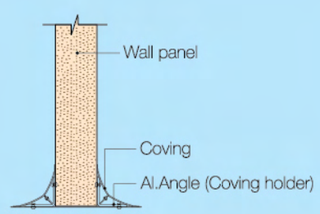

WALL TO FLOOR

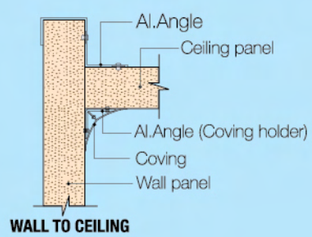

WALL TO CEILING

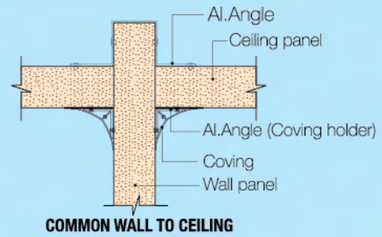

COMMON WALL TO CEILING

Flush and concealed Insulated Return Air Riser

Pressure Drop inch.w	Air Flow cfm (no Filter)	Air Flow cfm (with Filter)
0.02	193	99
0.04	311	168
0.06	417	240
0.08	501	302
0.10	576	358
0.12	625	420
0.14	675	479
0.16	753	535
0.18	793	569
0.20	853	625
0.25	952	700
0.30	1114	828
0.35	1218	918
0.40	1332	999
0.45	1434	1092
0.50	1531	1167
0.60	1674	1310
0.70	1767	1416
0.90	2054	1637
1.00	2175	1721
1.20	2430	1907
1.40	2629	2069
1.50	2701	2150
1.60	2794	2225

Filter : Washable Type, 75% average arrestance (EN779)

Return Air Riser Performance Curve

Cavity size : 60(w) x 945(l) x 3,500(h) mm.
600 x 600 mm. grille

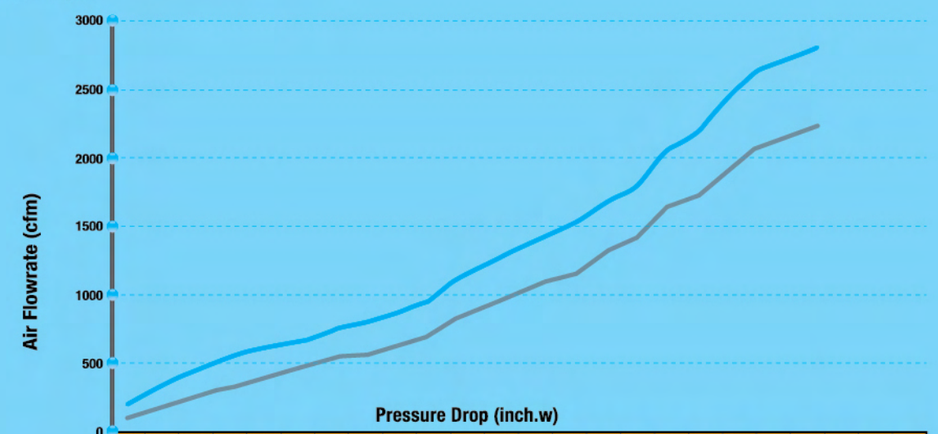

	0.02	0.04	0.06	0.08	0.1	0.12	0.14	0.16	0.18	0.2	0.25	0.3	0.35	0.4	0.45	0.5	0.6	0.7	0.9	1	1.2	1.4	1.5	1.6
Air Flow cfm (no filter)	193	311	417	501	576	625	675	753	793	853	952	1114	1218	1332	1434	1531	1674	1767	2054	2175	2430	2629	2701	2794
Air Flow cfm (with filter)	99	168	240	302	358	420	479	535	569	625	700	828	918	999	1092	1167	1310	1416	1637	1721	1907	2069	2150	2225

TOP CONNECTING FLANGE

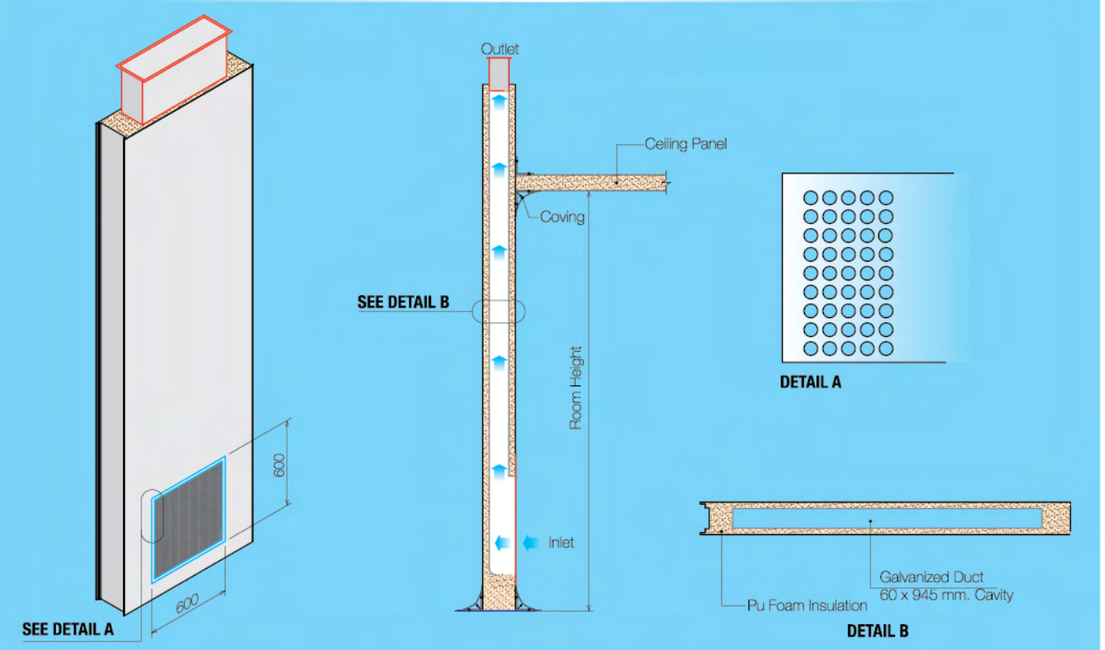

SIDE CONNECTING FLANGE

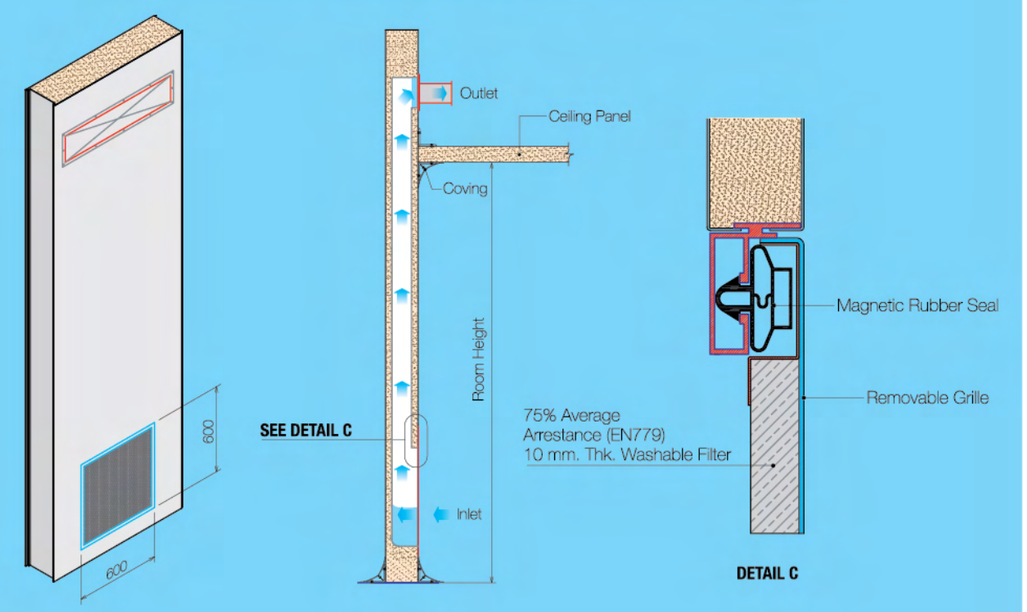

Square Panel System Co., Ltd.

21/485 Moo 12, Bangna-Trad Rd, Bangna,

Bangkok 10260 Thailand

Tel. (662) 749-2954, (662) 744-6300-2 Ext. 2

Fax. (662) 744-6303

E-mail: sale@squarepanel.com

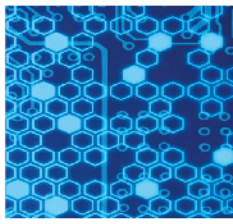

Home page: http://www.squarepanel.com